New! Low Emission Double Back Check Filler Valve
L6579

Only 2.14 cubic centimeters discharge, a 68% improvement with no change in filling rates!

L6579

Application

Designed for fast filling and low emissions at disconnect; the L6579 Series can be used as a filler valve on ASME domestic containers and larger DOT cylinders.

Features

- Low emission- 2.14 cubic centimeters at disconnect (2.14cc versus 6.85cc)
- Double back check provides added system protection
- Both checks are spring actuated for quick precise closure when flow in the valve stops or reverses.
- Shear groove below ACME threads is designed to protect the valve in the event of a pull-away.

Materials

Upper Body.....Brass
Lower Body.....Brass
Springs ..... Stainless Steel
Seat Disc .....Synthetic Rubber
Cap .....Resilient Molded Plastic

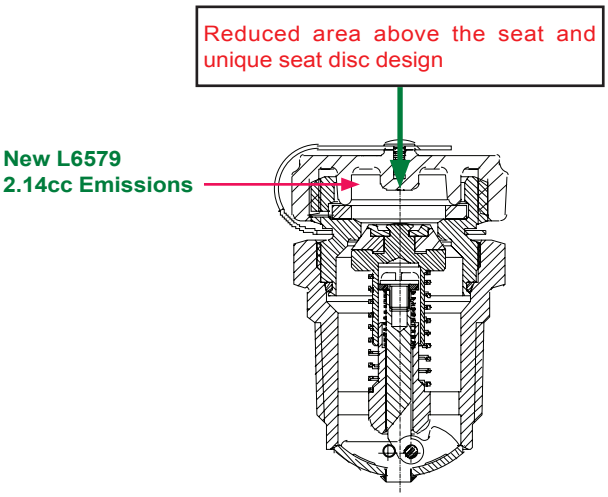

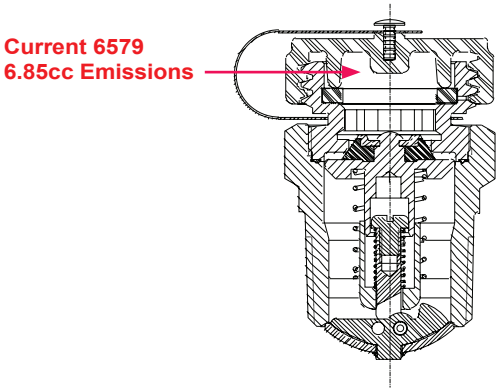

Ordering Information

Part Number		Acme Size	Tank Conn.	Wrench Flats	Propane Liquid Capacity at Various Differential Pressures				
Cap Only	Cap & Chain				5 PSIG	10 PSIG	25 PSIG	50 PSIG	75 PSIG
L6579	L6579C	1¾”	1¼”	1⅞”	78 (gpm)	110 (gpm)	174 (gpm)	246 (gpm)	301(gpm)