# Electric Actuators

Electric Actuators are a simple, safe and reliable solution with accurate and smooth motion control. There is no need for a compressed air source and no concern of moisture freezing shutting a system down. Remote emergency-shut-down locations can be easily installed and easily maintained. The electric actuators come installed on the valve and are tested for proper operation at the factory. All electric actuators are rated CSA UL Class 1 Div 1 Explosion proof enclosures.

Electric actuators are available to retrofit existing RegO valves and are easy to install. Positional indication and operation, can be remoted to a truck cab or control panel (or PLC) to indicate valve position. Manual override handle also indicates position and can be used for Lock-Out. An internal heater is installed to ensure reliability. A thermal fuse is incorporated to ensure no over temp.

**Safety Features**

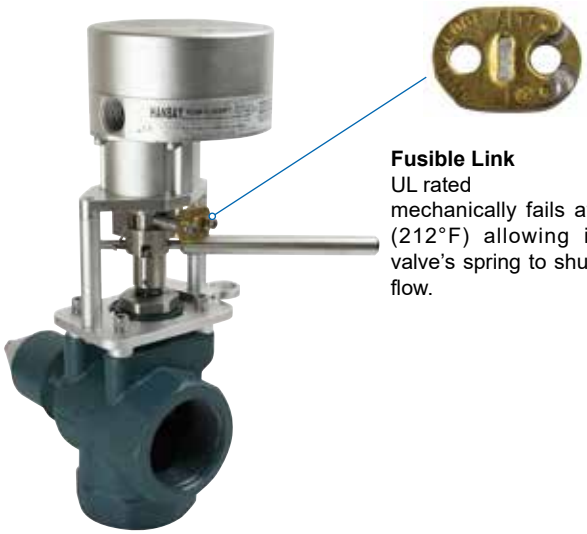

**Fusible Link**
UL rated
mechanically fails at 100°C (212°F) allowing internal valve's spring to shut off the flow.

**Electronic Thermal Cut-Off**
Internal component cuts power line at 89°C (208°F). Actuator closes when power is lost.

**General Specifications**

| Model | Torque Range (in-lbs) | Speed Range (time to open) |
|---|---|---|
| RDM | 44 .. 95 | 2 sec .. 10 sec |

- Enclosure: NEMA 6 / IP67 IP67 / 40°C (104°F)
- Enclosure: Class 1, Div 1 Groups D, C, D /T6
- Temperature Range: -40°C/F .. 70°C (185°F) Internal heater standard
- Finish: Anodized white, Stainless
- Stall Protection: By current sense and motion detection
- Feedback: Limit switches
- Life Expectance: 250,000 cycles or equivalent under specified conditions
- Motor: BLDC brushless DC motor
- Voltages: 12/24 VDC
- Positioning precision: +/- 3 deg
- Range Setting: Set according to valve
- Speed setting: Set according to valve
- End of travel detection: By current sense and motion detection
- Power setting: Set according to valve
- Motor control: Internal micro controller
- Mechanical shock: 1 m drop test no damage to function Random SAE J1211, Chassis, Exterior
- Mechanical vibration: Random SAE J1211, Chassis, Exterior

- Housing: All housing parts anodized aluminum
- Bearings: Oiled for life porous bronze bearings
- External Fasteners: Stainless Steel
- Manual Override: Mounted Directly on the valve stem
- Control: 12/24 VDC TTL
- Limit Switches: Switches are triggered at fully closed, and fully open position. (independent I/O)


REGO 100 RegO Dr. Elon, NC 27244 USA www.regoproducts.com Phone (336) 449-7707

# 1¼” Threaded Internal Valve with Electric Actuator for Small Capacity Pumping Systems and Bobtail Vapor Equalization EA3209E Series

## Application

Designed primarily for use with anhydrous ammonia as a main valve on small capacity pumping systems, NH3 nurse tanks and in-line installations. It may also be installed in the vapor equalizing opening on bobtail delivery trucks. Installation is quick and easy, and it fits in both full and half couplings, as well as, in-line applications.

## Features

- One piece body construction.
- Spring loaded V-packing with heavy duty wiper ring on operating shaft for dependable leak-free construction.
- Nylon bearing supported operating shaft provides smooth, easy operation.
- Excess flow valve feature
- Return spring forces the valve lever to the closed position when the power is de-energized.
- All critical operating components are located in the valve body and inside the container coupling for maximum protection against damage.
- Midway stem position (rapid bleed) allows for quick pressure equalization.
- Equipped with 212° F, UL listed fuse link for thermal protection.
- Provides a convenient means of electrically opening and closing the valve from a remote location.
- CSA/UL rated Explosion Proof Enclosure on the actuator.
- Class I, Div 1 Groups B, C, D, / T6
- 12-24VDC
- Internal Valve is UL Listed and TPED Certified
- Electric Actuator is ATEX Certified

EA3209D Series

## Materials

| | |
|---|---|
| Body | Ductile Iron |
| Operating Lever | Cadmium Plated Carbon Steel |
| Stem | Stainless Steel |
| Springs | Stainless Steel |
| Seat Disc | Resilient Synthetic Rubber |
| Shaft Bearing | Nylon |

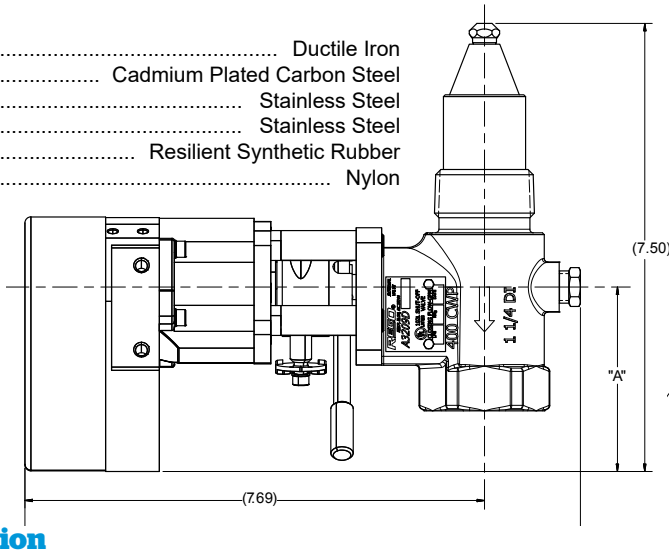


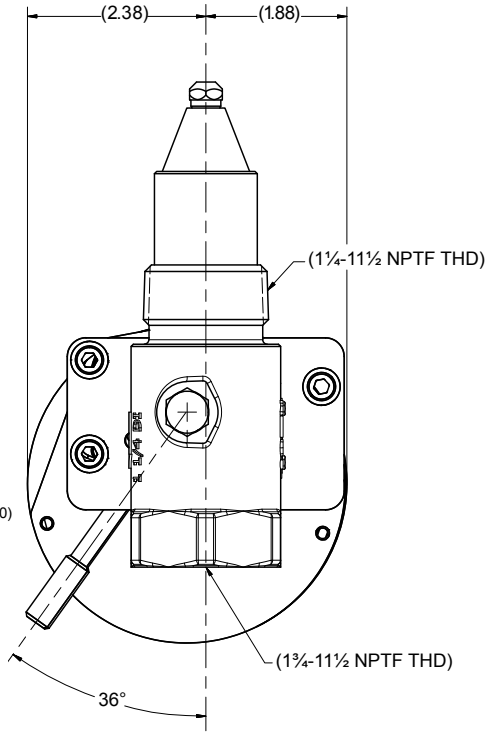


## Ordering Information

| Part Number | Inlet Connection M. NPT | Outlet Connection F. NPT | Voltages | Closing Flow NH3 |
|---|---|---|---|---|
| EA3209D050 | 1¼” | 1¼” | 12/24 VDC | 45 |
| EA3209D080 | 1¼” | 1¼” | | 72 |
| EA3209DT050* | 1¼” | 1¼” | | 45 |
| EA3209DT080* | 1¼” | 1¼” | | 72 |

* T-Body Design

# 1½" Internal Valve with Electric Actuator
# EA3211D Series

## Application
Designed primarily for use with anhydrous ammonia as a main valve on pumping systems, and in-line installations. Installation is quick and easy and it fits in both full and half couplings, as well as, in-line applications.

## Features
- One piece body construction.
- Spring loaded V-packing with heavy duty wiper ring on operating shaft for dependable leak-free construction.
- Nylon bearing supported operating shaft provides smooth, easy operation.
- Excess flow valve feature
- Return spring forces the valve lever to the closed position when the power is de-energized.
- All critical operating components are located in the valve body and inside the container coupling for maximum protection against damage.
- Midway stem position (rapid bleed) allows for quick pressure equalization.
- Equipped with 212° F, UL listed fuse link for thermal protection.
- Provides a convenient means of electrically opening and closing the valve from a remote location.
- CSA/UL rated Explosion Proof Enclosure on the actuator.
- Class I, Div 1 Groups B, C, D, / T6
- 12-24VDC
- Internal Valve is UL Listed and TPED Certified
- Electric Actuator is ATEX Certified

EA3211D Series

## Materials
Body ..... Ductile Iron
Operating Lever..... Cadmium Plated Carbon Steel
Stem ..... Stainless Steel
Springs ..... Stainless Steel
Shaft Bearing..... Nylon
Seat Disc ..... Synthetic Rubber

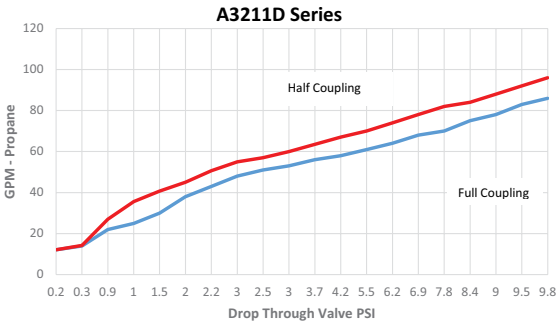


## Ordering Information

| Part Number | Inlet M.NPT | Outlet F.NPT | Voltages | Closing Flow GPM | |
|---|---|---|---|---|---|
| | | | | Half Coupling | Full Coupling |
| EA3211D080 | 1½" | 1½" | 12/24 VDC | 72 | 67 |
| EA3211D110 | 1½" | 1½" | | 99 | 76 |


REGO 100 RegO Dr. Elon, NC 27244 USA www.regoproducts.com Phone (336) 449-7707

# 2" Internal Valves with Electric Actuator For Bobtail Delivery Trucks, Transports and Stationary Storage Tanks EA3212 Series

## Application

Designed primarily for use with anhydrous ammonia for liquid withdrawal; vapor transfer or vapor equalization of bobtail delivery trucks, transports, stationary storage tanks, and in-line installations.

## Features

- One piece body construction.
- Spring loaded V-packing with heavy duty wiper ring on operating shaft for dependable leak-free construction.
- Nylon bearing supported operating shaft provides smooth, easy operation.
- Excess flow valve feature
- Return spring forces the valve lever to the closed position when the power is de-energized.
- All critical operating components are located in the valve body and inside the container coupling for maximum protection against damage.
- Midway stem position (rapid bleed) allows for quick pressure equalization.
- Equipped with 212° F, UL listed fuse link for thermal protection.
- Provides a convenient means of electrically opening and closing the valve from a remote location.
- CSA/UL rated Explosion Proof Enclosure on the actuator.
- Class I, Div 1 Groups B, C, D, / T6
- 12-24VDC
- Internal Valve is UL Listed and TPED Certified
- Electric Actuator is ATEX Certified

UL LISTED

EA3212R Series

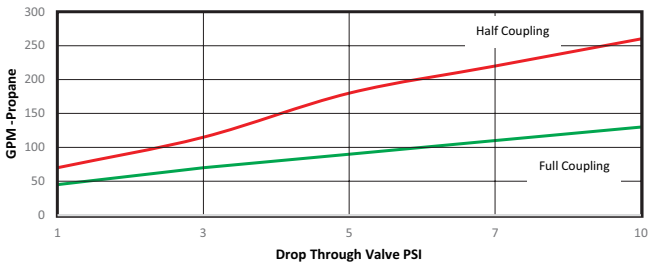


## Materials

| | |
|---|---|
| Body | Ductile Iron |
| Operating Lever | Cadmium Plated Steel |
| Stem | Stainless Steel |
| Springs | Stainless Steel |
| Seat Disc | Resilient Synthetic Rubber |
| Shaft Bearing | Nylon |

REGO 10 YEAR WARRANTY

ATEX

## Ordering Information

| Part Number | Inlet Connection M. NPT | Outlet Connection F. NPT | Voltages | Closing Flow (GPM) Half Coupling | Closing Flow (GPM) Full Coupling |
|---|---|---|---|---|---|
| EA3212R105 | 2" | 2" | 12/24 VDC | 95 | 59 |
| EA3212RT105 | | 2" T-body | | | |
| EA3212R175 | | 2" | | 158 | 90 |
| EA3212RT175 | | 2" T-body | | | |
| EA3212R250 | | 2" | | 225 | 117 |
| EA3212RT250 | | 2" T-body | | | |

# 3" Internal Valves with Electric Actuator For Bobtail Delivery Trucks, Transports and Stationary Storage Tanks EA3213D Series

## Application

Designed primarily for use with anhydrous ammonia for liquid withdrawal; vapor transfer or vapor equalization of bobtail delivery trucks, transports, stationary storage tanks, and in-line installations.

UL LISTED

## Features

- One piece body construction.
- Spring loaded V-packing with heavy duty wiper ring on operating shaft for dependable leak-free construction.
- Nylon bearing supported operating shaft provides smooth, easy operation.
- Excess flow valve feature
- Return spring forces the valve lever to the closed position when the power is de-energized.
- All critical operating components are located in the valve body and inside the container coupling for maximum protection against damage.
- Midway stem position (rapid bleed) allows for quick pressure equalization.
- Equipped with 212° F, UL listed fuse link for thermal protection.
- Provides a convenient means of electrically opening and closing the valve from a remote location.
- CSA/UL rated Explosion Proof Enclosure on the actuator.
- Class I, Div 1 Groups B, C, D, / T6
- 12-24VDC
- Internal Valve is UL Listed and TPED Certified
- Electric Actuator is ATEX Certified

## Materials

Body ..... Ductile Iron
Operating Lever..... Cadmium Plated Steel
Stem ..... Stainless Steel
Springs ..... Stainless Steel
Seat Disc ..... Resilient Synthetic Rubber
Shaft Bearing..... Nylon

REGO 10 YEAR WARRANTY

ATEX

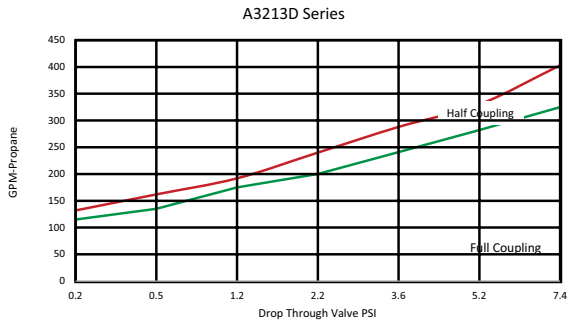


## Ordering Information

| Part Number | Inlet Connection M.NPT | Outlet Connections F.NPT | Voltages | Closing Flow Half Coupling (GPM) | Closing Flow Full Coupling (GPM) |
|---|---|---|---|---|---|
| EA3213D150 | 3" | 3" | 12/24 VDC | 135 | 113 |
| EA3213D200 | | | | 180 | 144 |
| EA3213D300 | | | | 270 | 225 |
| EA3213D400 | | | | 360 | 293 |
| EA3213DT150* | | | | 135 | 113 |
| EA3213DT200* | | | | 180 | 144 |
| EA3213DT300* | | | | 250 | 225 |
| EA3213DT400* | | | | 325 | 293 |

* T-body design



REGO 100 RegO Dr. Elon, NC 27244 USA www.regoproducts.com Phone (336) 449-7707

# 1¼" Threaded Internal Valve for Small Capacity Pumping Systems and Vapor Equalization A3209D & A3209DT Series

## Application

Designed primarily for use with anhydrous ammonia as a main valve on small capacity pumping systems, NH3 nurse tanks and in-line installations. It may also be installed in the vapor equalizing opening on delivery trucks. Installation is quick and easy, and it fits in both full and half couplings, as well as, in-line applications. The valve may be actuated manually by hand or cable.

## Features

- Valve is compact, with one piece body construction.
- Spring loaded V-packing with heavy duty wiper ring on operating shaft for dependable leak-free construction.
- Nylon bearing supported operating shaft provides smooth, easy operation.
- Simple operating lever allows for easy connection of cable controls.
- Built in excess flow valve
- Return spring forces the valve to the closed position when the lever is released.
- All critical operating components are located in the valve body and inside the container coupling for maximum protection against damage.
- Midway stem position allows for quick pressure equalization.
- Equipped with 212° F, UL listed fuse link for thermal protection.

## Materials

| | |
|---|---|
| Body | Ductile Iron |
| Operating Lever | Cadmium Plated Carbon Steel |
| Stem | Stainless Steel |
| Springs | Stainless Steel |
| Seat Disc | Resilient Synthetic Rubber |
| Shaft Bearing | Nylon |

UL LISTED

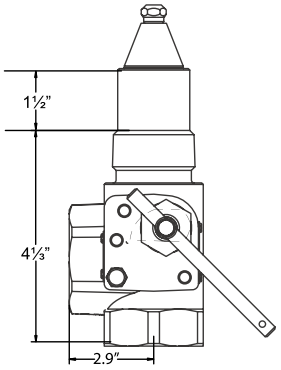


**A3209DT**

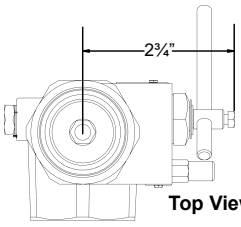


Top View

**A3209D**

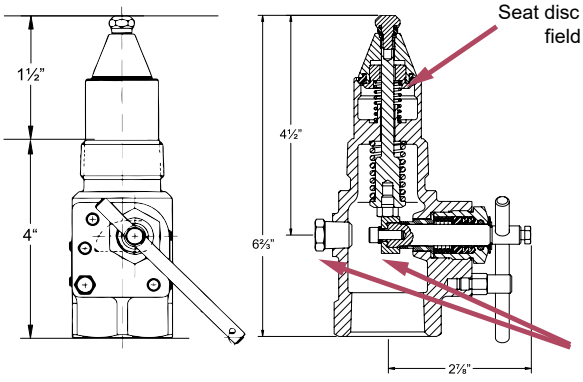


Seat disc fully retained and field replaceable

Cam attached with Allen head fastener which is accessed from the ¼" pipe plug on side of the body

REGO 10 YEAR WARRANTY

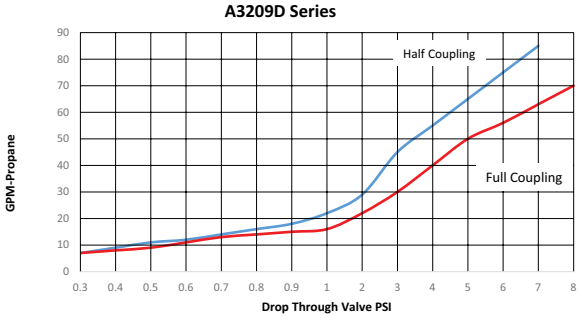


## Ordering Information

| Part Number | Inlet Connection M. NPT | Outlet Connection F. NPT | Closing Flow NH3 | Accessories | |
|---|---|---|---|---|---|
| | | | | Thermal Latch | Pneumatic Actuators |
| A3209D050 | 1¼" | 1¼" | 45 | A3209TL | A3209PA |
| A3209D080 | 1¼" | 1¼" | 72 | | |
| A3209DT050 | 1¼" | 1¼" | 45 | | |
| A3209DT080 | 1¼" | 1¼" | 72 | | |

# 1½" Internal Valve
# A3211D Series

## Application

Designed primarily for use with anhydrous ammonia as a main valve on pumping systems, and in-line installations. Installation is quick and easy, and it fits in both full and half couplings, as well as, in-line applications. The valve may be opened manually by hand or pneumatic actuator.

## Features

- Valve is compact, with one piece body construction.
- Spring loaded V-packing with heavy duty wiper ring on operating shaft for dependable leak-free construction.
- Nylon bearing supported operating shaft provides smooth, easy operation.
- Simple operating lever allows for easy connection of cable controls.
- Built in excess flow valve
- Return spring forces the valve to the closed position when the lever is released.
- All critical operating components are located in the valve body and inside the container coupling for maximum protection against damage.
- Midway stem position allows for quick pressure equalization.
- Equipped with 212° F, UL listed fuse link for thermal protection.

UL LISTED

REGO 10 YEAR WARRANTY

A3211D

## Materials

| | |
|---|---|
| Body | Ductile Iron |
| Operating Lever | Cadmium Plated Carbon Steel |
| Stem | Stainless Steel |
| Springs | Stainless Steel |
| Shaft Bearing | Nylon |
| Seat Disc | Synthetic Rubber |

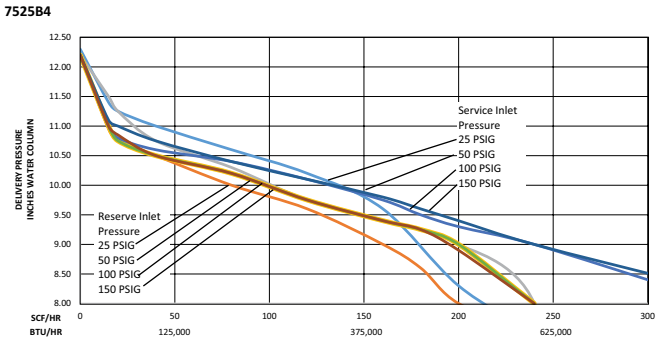


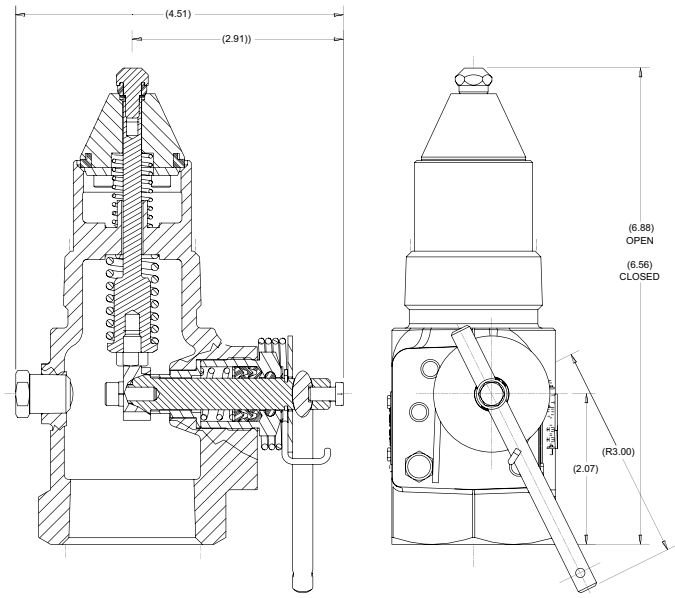


## Ordering Information

| Part Number | Inlet M-NPT | Outlet F-NPT | Closing Flow GPM | | Accessories |
|---|---|---|---|---|---|
| | | | Half Coupling | Full Coupling | |
| | | | NH3 | NH3 | Thermal Latch |
| A3211D080 | 1½" | 1½" | 72 | 67 | A3209TL |
| A3211D110 | 1½" | 1½" | 99 | 76 | |



REGO 100 RegO Dr. Elon, NC 27244 USA www.regoproducts.com Phone (336) 449-7707

# 2" Internal Valves For Delivery Trucks, Transports and Stationary Storage Tanks A3212 Series

## Application

Designed primarily for use with anhydrous ammonia for liquid withdrawal; vapor transfer or vapor equalization of delivery trucks, transports, stationary storage tanks, and in-line installations. The valve may be operated manually by cable or pneumatically.

UL LISTED

A3212R Series

## Features

- May be installed in full and half couplings.
- Nylon bearing supported operating shaft provides smooth, easy operation.
- Simple operating lever facilitates easy adaptation of all cable controls.
- Midway stem position allows for quicker pressure equalization.
- All critical operating components are located in the valve body inside the container coupling for maximum protection against physical damage.
- Built in excess flow valve.
- Return spring returns the valve to the closed position when the handle is released.
- Specify RegO® Internal Valves on your next new tank body or when your tank is rebuilt.
- A3213PA pneumatic actuator provides a convenient means of opening and closing the valve from a remote location, using either air or nitrogen for both the A3212R & A3213A service valves.

## Materials

| | |
|---|---|
| Body | Ductile Iron |
| Operating Lever | Cadmium Plated Steel |
| Stem | Stainless Steel |
| Springs | Stainless Steel |
| Seat Disc | Resilient Synthetic Rubber |
| Shaft Bearing | Nylon |

**A3212R Series**

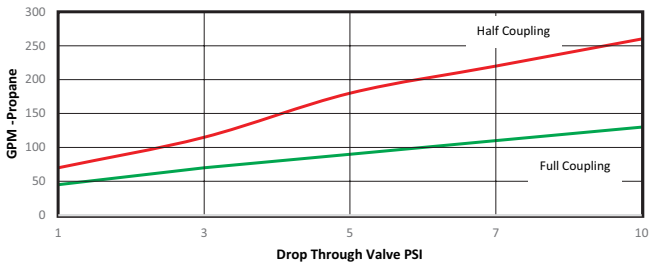


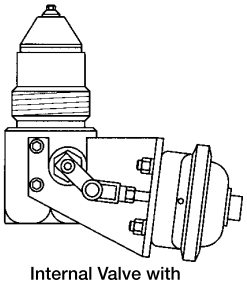

Internal Valve with Pneumatic Actuator

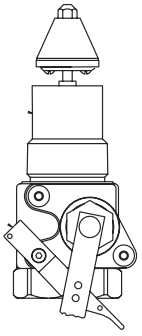

Internal Valve with Rotary Actuator

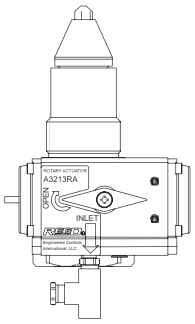

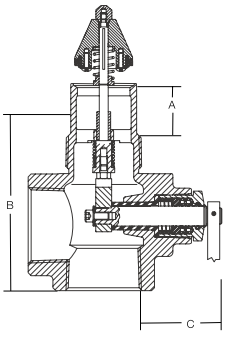


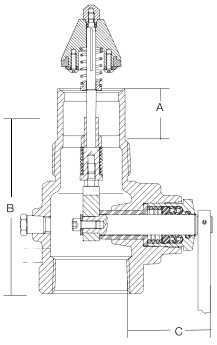


REGO 10 YEAR WARRANTY

## Ordering Information

| Part Number | Inlet Connection M. NPT | Outlet Connection F. NPT | Closing Flow (GPM) Half Coupling | Closing Flow (GPM) Full Coupling | A | B | C | Accessories | |
|---|---|---|---|---|---|---|---|---|---|
| | | | NH3 | NH3 | | | | Thermal Latch | Pneumatic Actuator |
| A3212R105 | 2" | 2" | 95 | 59 | $1^{9}/_{16}$" | $4^{11}/_{16}$" | $3^{45}/_{64}$" | A3213TL | A3213PA |
| A3212RT105 | | 2" T-body | | | | $4^{15}/_{16}$" | | | |
| A3212R175 | | 2" | 158 | 90 | | $4^{11}/_{16}$" | | | |
| A3212RT175 | | 2" T-body | | | | $4^{15}/_{16}$" | | | |
| A3212R250 | | 2" | 225 | 117 | | $4^{11}/_{16}$" | | | |
| A3212RT250 | | 2" T-body | | | | $4^{15}/_{16}$" | | | |

# 3" Internal Valves For Delivery Trucks, Transports and Stationary Storage Tanks A3213D Series

## Application

Designed primarily for use with anhydrous ammonia for liquid withdrawal; vapor transfer or vapor equalization of delivery trucks, transports, stationary storage tanks, and in-line installations. The valve may be operated manually by cable or pneumatically.

## Features

- May be installed in full and half couplings.
- Nylon bearing supported operating shaft provides smooth, easy operation.
- Simple operating lever facilitates easy adaptation of all cable controls.
- Midway stem position allows for quicker pressure equalization.
- All critical operating components are located in the valve body inside the container coupling for maximum protection against physical damage.
- Built in excess flow valve.
- Return spring returns the valve to the closed position when the handle is released.
- Specify RegO® Internal Valves on your next new tank body or when your tank is rebuilt.
- A3213PA pneumatic actuator provides a convenient means of opening and closing the valve from a remote location, using either air or nitrogen for A3213D service valves.

## Materials

| | |
|---|---|
| Body | Ductile Iron |
| Operating Lever | Cadmium Plated Steel |
| Stem | Stainless Steel |
| Springs | Stainless Steel |
| Seat Disc | Resilient Synthetic Rubber |
| Shaft Bearing | Nylon |

REGO 10 YEAR WARRANTY

LISTED

Seat disc fully retained and field replaceable.

Excess flow spring is independent from return spring operation

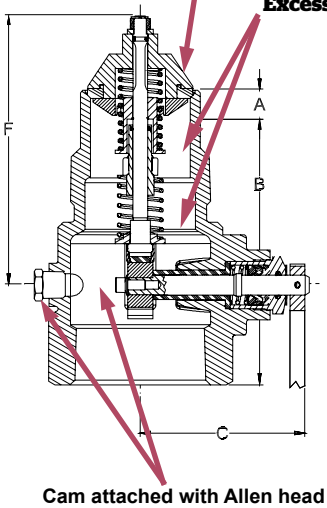

Cam attached with Allen head fastener which is accessed from the ¼" pipe plug on side of the body

**A3213D Series**

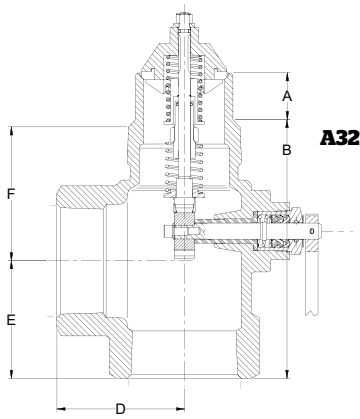


**A3213DT**

A3213D Series

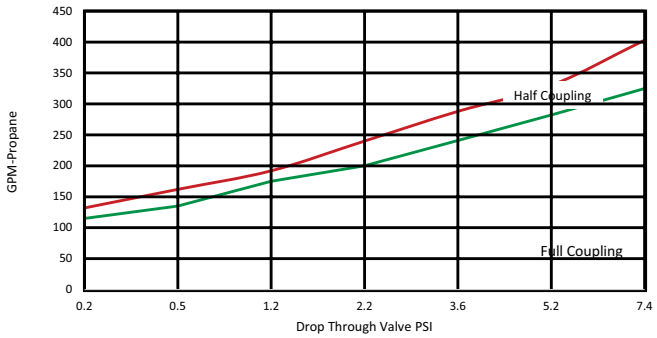


## Ordering Information

| Part Number | Inlet Connection M-NPT | Outlet Connections F-NPT | Closing Flow Half Coupling (GPM) NH3 | Closing Flow Full Coupling (GPM) NH3 | Accessories | |
|---|---|---|---|---|---|---|
| | | | | | Pneumatic Actuator | Thermal Latch |
| A3213D150 | 3" | 3" | 135 | 113 | A3213PA | A3213TL |
| A3213D200 | | | 180 | 144 | | |
| A3213D300 | | | 270 | 225 | | |
| A3213D400 | | | 360 | 293 | | |
| A3213DT150 | | | 135 | 113 | | |
| A3213DT200 | | | 180 | 144 | | |
| A3213DT300 | | | 250 | 225 | | |
| A3213DT400 | | | 325 | 293 | | |



REGO 100 RegO Dr. Elon, NC 27244 USA www.regoproducts.com Phone (336) 449-7707

# 3” Flanged Internal Valves for Delivery Trucks, Transports and Large Stationary Storage Containers A3217A & A3217DA

## Application

Designed primarily for anhydrous ammonia filling and/or withdrawal on MC331 delivery trucks, transports and stationary storage tanks with flanged pumps or piping. Installation is quick and easy, and the valve may be operated manually by cable or pneumatically.
Lever available on right or left side to allow for installation without the use of an extra pulley.

UL LISTED

REGO 10 YEAR WARRANTY

A3217AR

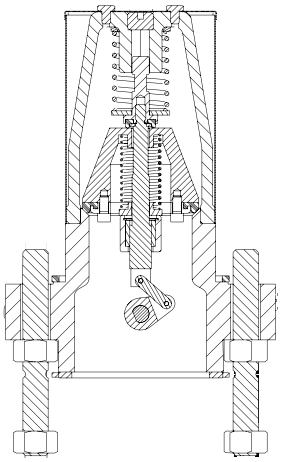

## Features

**Provides More Efficient Operation**

- Flow passages designed to allow substantially higher without cavitation or loss of efficiency--saving time and money.
- Simple operating lever facilitates easy adaptation of all cable controls.
- Lever available on right or left side to allow for installation without the use of an extra pulley.
- Nylon bearing supported operating shaft provides smooth, easy operation.

**Less Frequent-Easier Maintenance**

- Stainless steel screws resist rusting and are easily removed during valve disassembly.
- Heavy duty rod wiper helps minimize dirt and foreign material from entering operating shaft and hampering operation.

**Durable Construction**

- Cadmium plating helps resist corrosion during storage and use.
- All ferrous materials with a temperature range of -40° F. to +165° F. and a pressure rating of 400 psi.
- Sturdy retaining ring secures operating cam to provide for more durable, slack-free operation.
- Built-in excess flow valve.
- Specify RegO® Internal Valves on your next new tank or when your truck is rebuilt.

## Ordering Information

| Part Number | | Operating Lever Position | Inlet Connection | Outlet Connection | Closing Flow GPM NH3 | Accessories: Pneumatic Actuator Right Operation | Accessories: Pneumatic Actuator Left Operation |
|---|---|---|---|---|---|---|---|
| **Single Flange** | | | | | | | |
| A3217AR160 | A3217AL160 | Left or Right | 3” 300# ANSI RF Modified Flange* | 3” 300# ANSI RF Flange | 145 | A3217ARPA | A3217ALPA |
| A3217AR210 | A3217AL210 | | | | 190 | | |
| A3217AR260 | A3217AL260 | | | | 236 | | |
| A3217AR410 | A3217AL410 | | | | 372 | | |
| A3217AR510 | A3217AL510 | | | | 461 | | |
| **Double Flange** | | | | | | | |
| A3217DAR160 | A3217DAL160 | Left or Right | 3” 300# ANSI RF Modified Flange* | 3” 300# ANSI RF Flange | 145 | A3217ARPA | A3217ALPA |
| A3217DAR210 | A3217DAL210 | | | | 190 | | |
| A3217DAR260 | A3217DAL260 | | | | 236 | | |
| A3217DAR410 | A3217DAL410 | | | | 372 | | |
| A3217DAR510 | A3217DAL510 | | | | 461 | | |

Furnished with mounting studs and nuts
**Modified bore=4⅝” diameter with 5¾” diameter raised face.

# 3” Flanged Internal Valves for Delivery Trucks, Transports, and Large Stationary Storage Tanks

## Application

A3217FPA and A3217FLPA Pneumatic Actuators
These Pneumatic Actuators are designed specifically for use with the A3217 Series 3” Internal Valves. The diaphragm design provides a convenient means of opening and closing the valve from a remote location, using either air or nitrogen.

## Features

- Diaphragm type–no seals to leak.
- Easily installed on internal valve “in-line.”
- Utilizes standard air brake chamber with proven performance over many years of heavy-duty truck/trailer applications.
- Compatible with existing air interlock systems.
- Operates with pressures of 50-150 psig.
- Thermal Fuse installed complies with DOT thermal protection requirements.

## Materials

| | |
|---|---|
| Body and Valve Cage | Cadmium Plated Ductile Iron |
| Seat | Nickel Chrome Plated Steel |
| Strainer | Stainless Steel |
| Shaft | Stainless Steel |
| Pilot Valve Stem | Stainless Steel |
| Springs | Stainless Steel |
| Actuator Cam | Stainless Steel |
| Lever | Cadmium Plated Carbon Steel |
| Seat Disc | Resilient Synthetic Rubber |

Typical Valve Installation

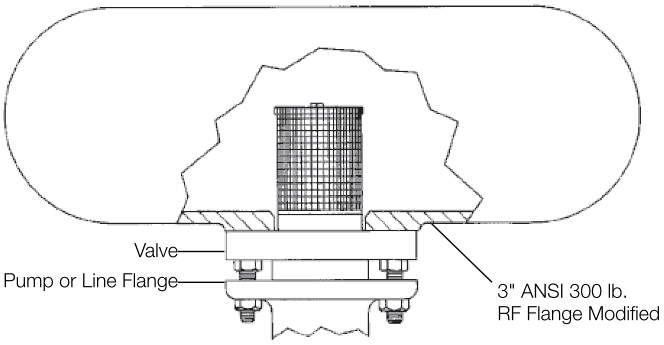


A3217A & FA Series

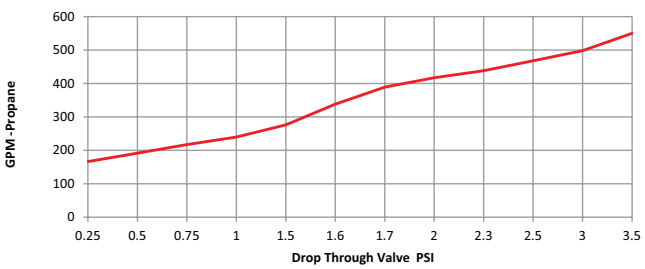


LISTED

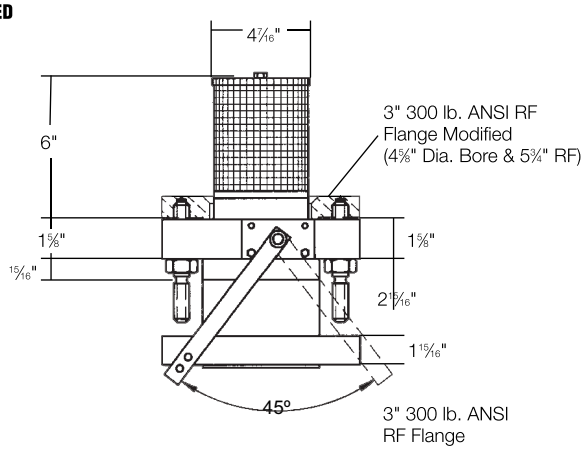


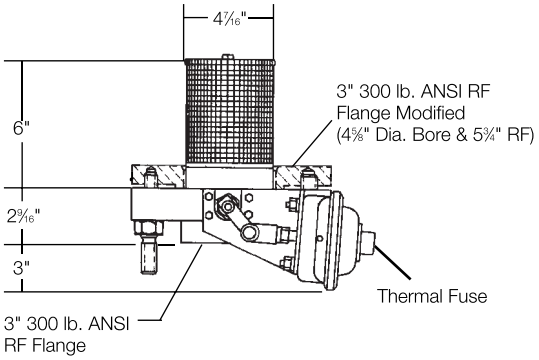


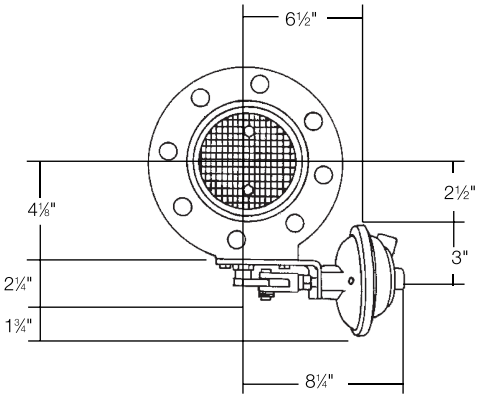




REGO 100 RegO Dr. Elon, NC 27244 USA www.regoproducts.com Phone (336) 449-7707

# 4” Flanged Internal Valve for Transports and Large Stationary Storage Tanks A3219 Series

## Application

Designed primarily for anhydrous ammonia service on MC331 transport pressure vessels and large stationary storage tanks. Installation is quick and easy, and it fits in most existing tank flanges. The valve may be actuated manually or pneumatically.

Use of the A3219RT Remote Thermal Release with this valve is suggested to provide a remote means of mechanical closure along with thermal protection, as required by DOT.

UL LISTED

A3219FA

## Features

**Provides More Efficient Operation**

- Flow passages designed to allow higher pumping rates without cavitation or loss of efficiency—saves time and money.
- One piece, stainless steel pilot valve provides more accurate alignment for dependable operation.
- Remote release lever allows cables to run directly to opposite ends of vessel without pulleys or tubing.

**Protects Your Pump**

- Main disc retaining screws are installed from the top down to help minimize loose screws from entering and damaging the pump.
- Back-up cotter pin is designed to minimize the chance of a loosened actuator nut and washer from entering and damaging the pump.

**Less Frequent-Easier Maintenance**

- Easily replaceable chrome plated seat insert eliminates need for expensive remachining of valve body when overhauled.
- Stainless steel screws resist rusting and are easily removed during valve disassembly.
- Strainer completely covers the top of the valve to help keep out sediment and foreign material.
- Stainer seats at the top flange of the valve’s seat insert, making removal of the valve easier.

**Durable Construction**

- Cadmium plating helps resist corrosion during storage and use.
- Taper pin lock secures the operating shaft to provide for more precise,trouble-free actuation.
- Built-in excess flow valve and thermal protection.
- Specify RegO® Internal Valves on your next new tank body or rebuild.

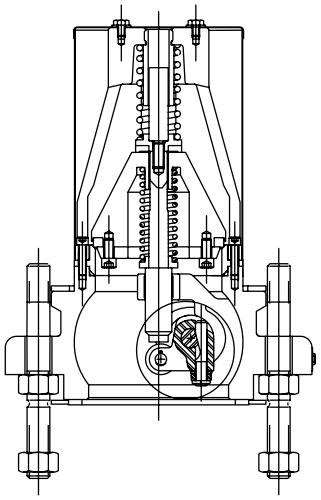

REGO 10 YEAR WARRANTY

## Materials

| | |
|---|---|
| Body and Valve Cage | Cadmium Plated Ductile Iron |
| Handle | Cadmium Plated Ductile Iron |
| Seat | Nickel Chrome Plated Steel |
| Strainer | Stainless Steel |
| Stem | Stainless Steel |
| Pilot Valve Plug | Stainless Steel |
| Springs | Stainless Steel |
| Roller Actuator | Cadmium Plated Carbon Steel |
| Lever Assembly | Cadmium Plated Carbon Steel |
| Seat Disc | Resilient Synthetic Rubber |

## Ordering Information

| Part Number* | Inlet Connection | Outlet Connection | Closing Flow GPM*** | Accessories | |
|---|---|---|---|---|---|
| | | | NH3 | Pneumatic Actuator | Remote Thermal Release |
| A3219FA400L | 4” 300# ANSI RF Modified Flange** | 4” 300# ANSI RF Flange | 400 | A3219FPA | A3219RT (2) |
| A3219FA600L | | | 600 | | |

* Valve supplied with 16 nuts and 8 studs for mounting.
** Modified bore = 5 7/8” diameter with 7” diameter raised face.
*** Other closing flows available

# 4” Flanged Internal Valves for Transports and Large Stationary Storage Tanks

## Application

A3219FPA Pneumatic Actuator
The A3219FPA Pneumatic Actuator is designed especially for use with the A3219FA Series Flanged Internal Valves. The diaphragm type A3219FPA provides a convenient means of opening and closing the valve from a remote location, using either air or nitrogen, on NH3 transport trailers and stationary tanks.

## Features

- Diaphragm type–no seals to leak.
- Easily installed on internal valve “in-line,”
- Utilizes standard brake actuator with time proven performance in heavy-duty truck/trailer applications.
- Compatible with existing air interlock systems.
- Operate with pressures of 50-150 psig.
- Thermal fuse installed in actuator complies with DOT thermal protection requirements.

Typical Valve Positioning

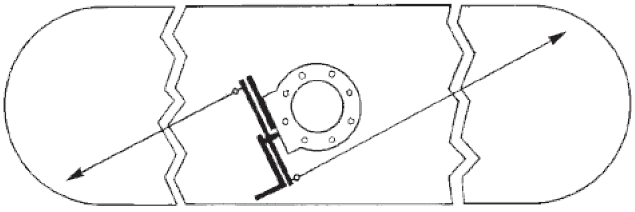

Typical Valve Installation

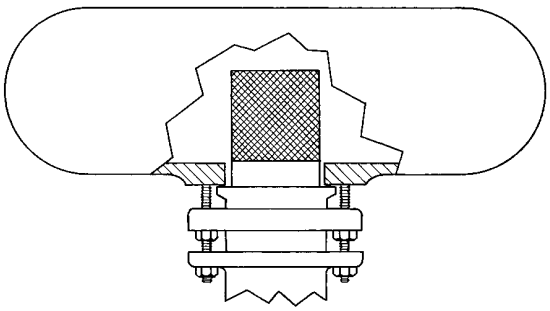

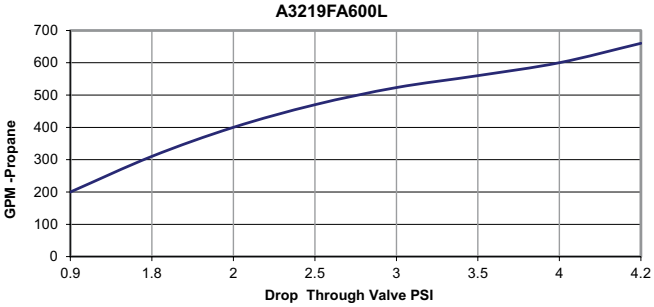


LISTED

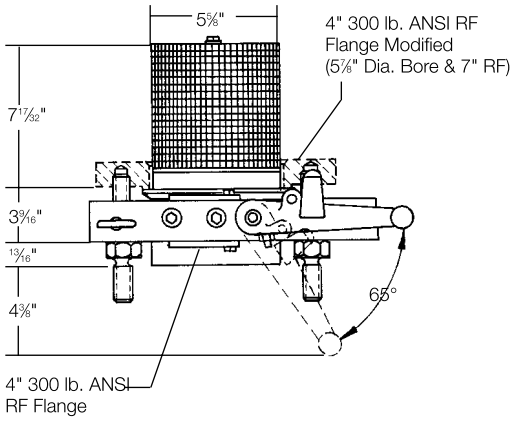


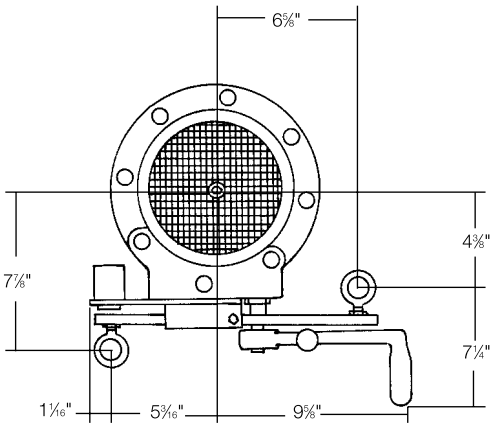


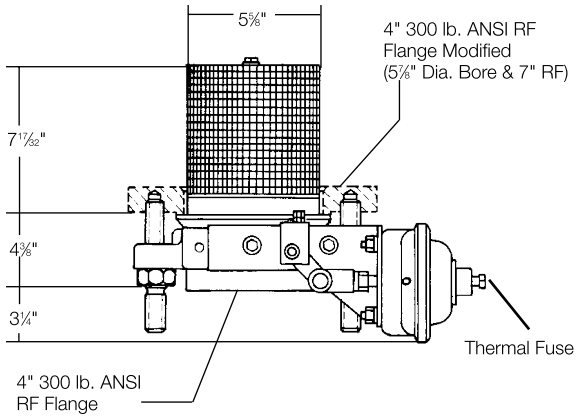


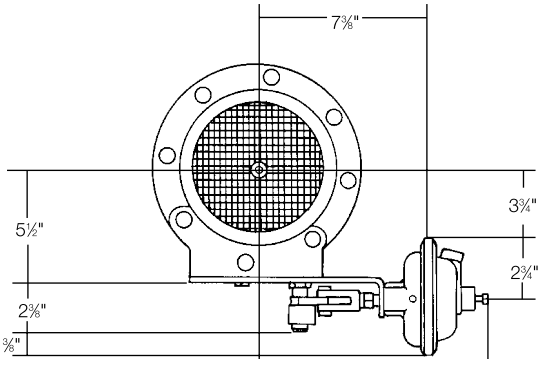




REGO 100 RegO Dr. Elon, NC 27244 USA www.regoproducts.com Phone (336) 449-7707